Model DF033D CORDLESS DRIVER DRILL

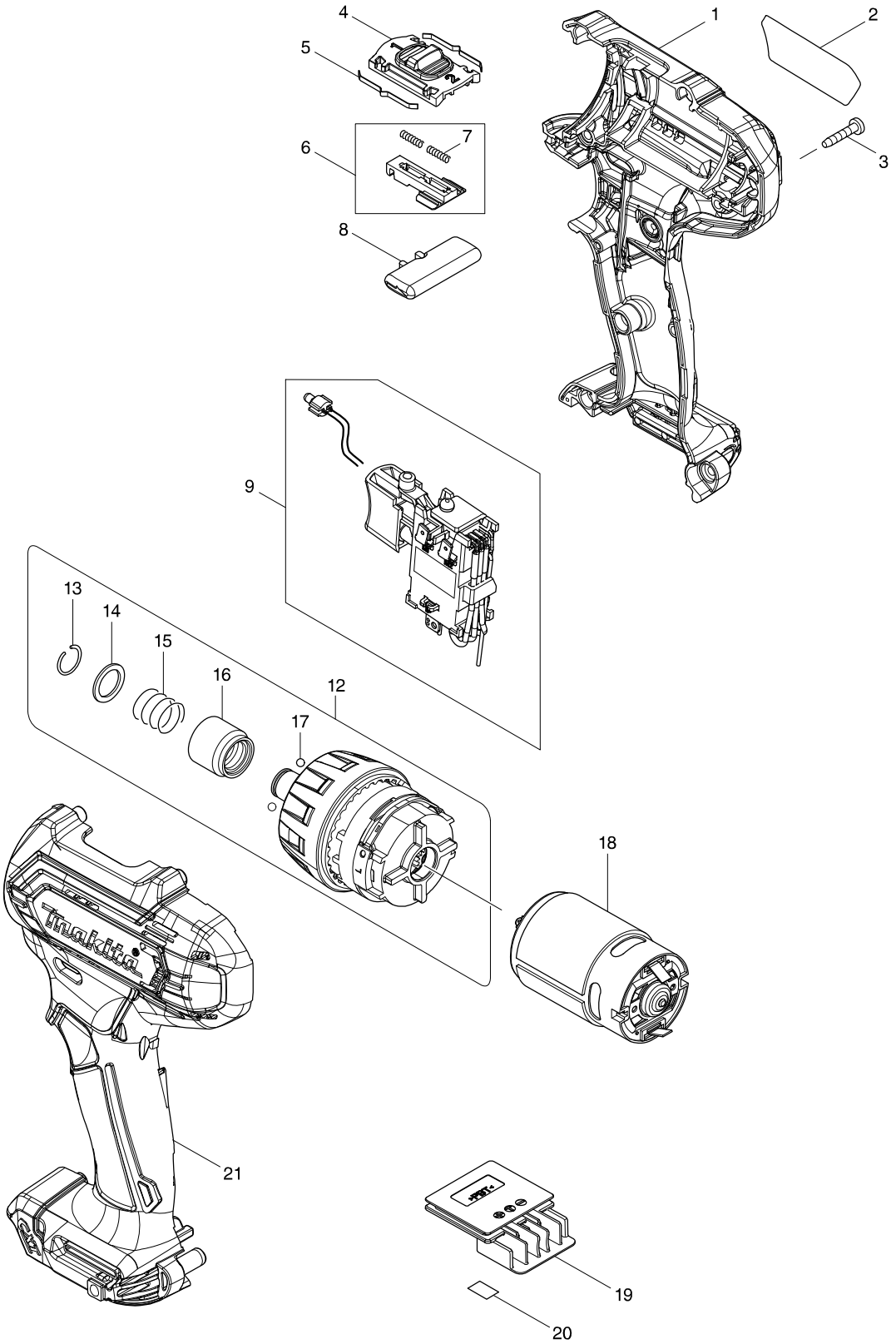

Model DF033D CORDLESS DRIVER DRILL

Položka	Objednávacie	Popis	I/C	ks	N/O	Možnosť 1	Možnosť 2	Poznámka
001	183K90-5	HOUSING SET		1				
C10	252126-6	HEX. LOCKING NUT M4-7		2				
D10		INC. 21						
002	855E57-4	DF033D NAME PLATE		1				
003	266429-2	TAPPING SCREW 3X16		9				
004	459026-3	SPEED CHANGE LEVER		1				
005	232493-5	LEAF SPRING		2				
006	127127-2	CHANGE LEVER ASSEMBLY		1				
D10		INC. 7						
007	233025-1	COMPRESSION SPRING 2		2				
008	456039-5	F/R CHANGE LEVER		1				
009	632J76-5	SWITCH UNIT		1				
C10	620625-0	LED CIRCUIT		1				
C20	688161-2	LINE FILTER		1				
012	127126-4	GEAR ASSEMBLY		1				
D10		INC. 13-17						
013	231965-7	RING SPRING 10		1				
014	347004-4	BIT WASHER		1				
015	233005-7	COMPRESSION SPRING 13		1				
016	326677-6	BIT SLEEVE		1				
017	216019-1	STEEL BALL 3		2				
018	629395-8	DC MOTOR		1				
019	644813-5	TERMINAL		1				
020	855E64-7	DF033D SERIAL NO. LABEL		1				
021	183K90-5	HOUSING SET		1				
C10	252126-6	HEX. LOCKING NUT M4-7		2				
D10		INC. 1						
A01	251314-2	+ SCREW M4X12		1				
A02	346909-5	HOOK		1				
A03	784244-7	+ BIT 2-50		1				
E01	632N11-7	LINE FILTER UNIT		1				