DE	GERMANY

Diagram / Parts List

DML186

LED FLASHLIGHT

2021/01

(DE) DML186 / LED FLASHLIGHT

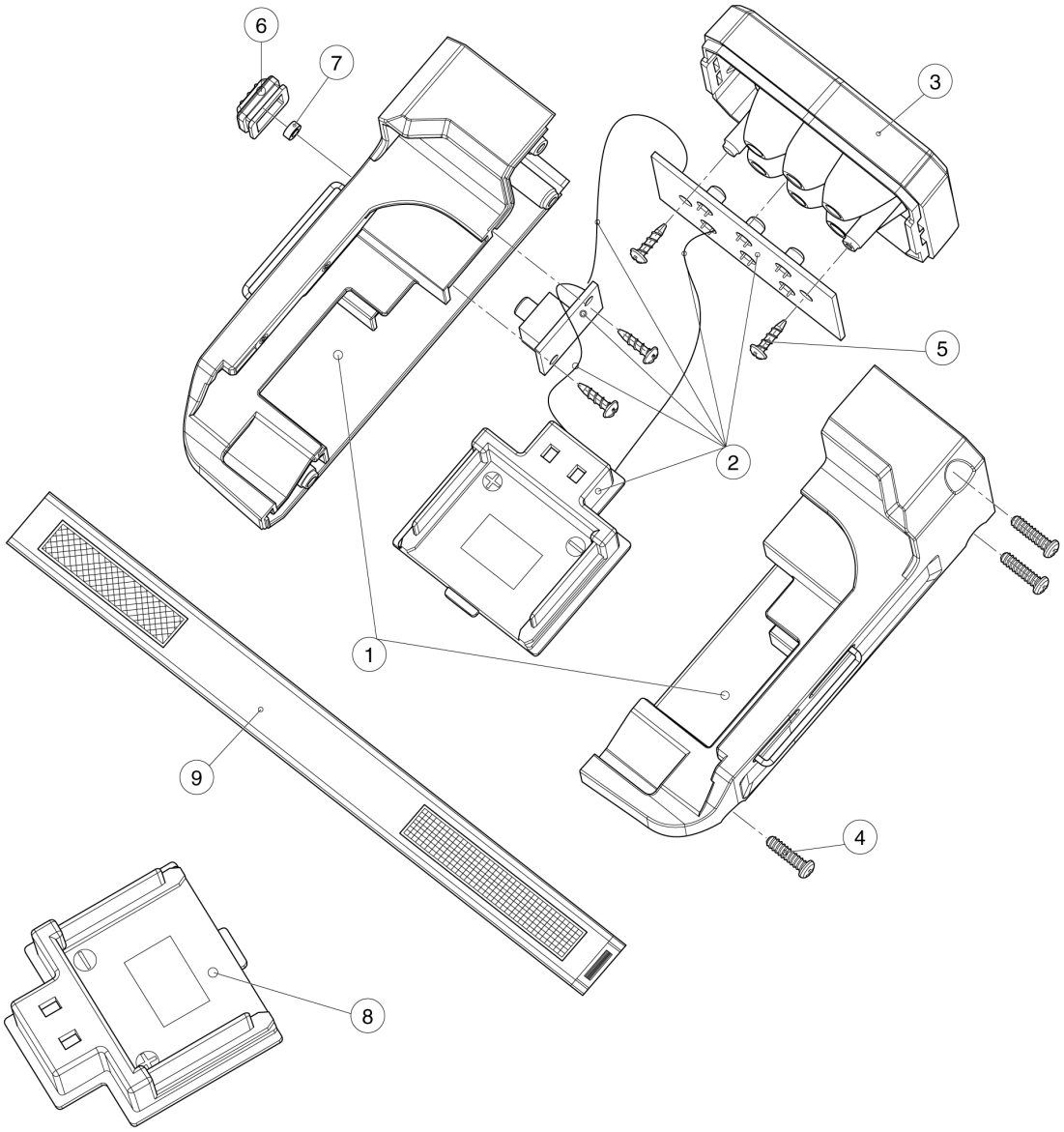

DE	GERMANY

DML186 / LED FLASHLIGHT

Item	Sub	Parts No.	Parts Description	Qty	I/C	E/C No.	Close No.	Remark
001		GM00001194	H.BODY ASSY (ROS11869802)	1				
002A		GM00001187	LED CIRCUIT ASSY (ROS11869801)	1			Y05990	
002-1A		GM00001239	LED CIRCUIT ASSY (ROS11869805)	1	O	Y05990		
002-1B		GM00001239	LED CIRCUIT ASSY (ROS11869805)	1				
003		GM00001188	LIGHT HEAD ASSY (ROS11869804)	1				
004		GM00001189	SCREW 3X12BB (B0130120712)	3				
005		GM00001190	SCREW 2.6X10PWA (B0126100705)	4				
006		GM00001191	SWITCH COVER (C9010186006)	1				
007		GM00001192	SWITCH COVER RING(C0110186010)	1				
008		GM00001116	BATTERY HOLDER (C2004185006)	1				
009		GM00001193	RUBBER BAND (D1101186100)	1				

A:
B:

Interchange
O : Yes
X : No
< : the new part can be substituted for the current.
> : the current part can be substituted for the new.
S : Interchangeable as a set.