DE	GERMANY

Diagram / Parts List

ML103

CORDLESS LED FLASHLIGHT

2021/09

(DE) ML103 / CORDLESS LED FLASHLIGHT

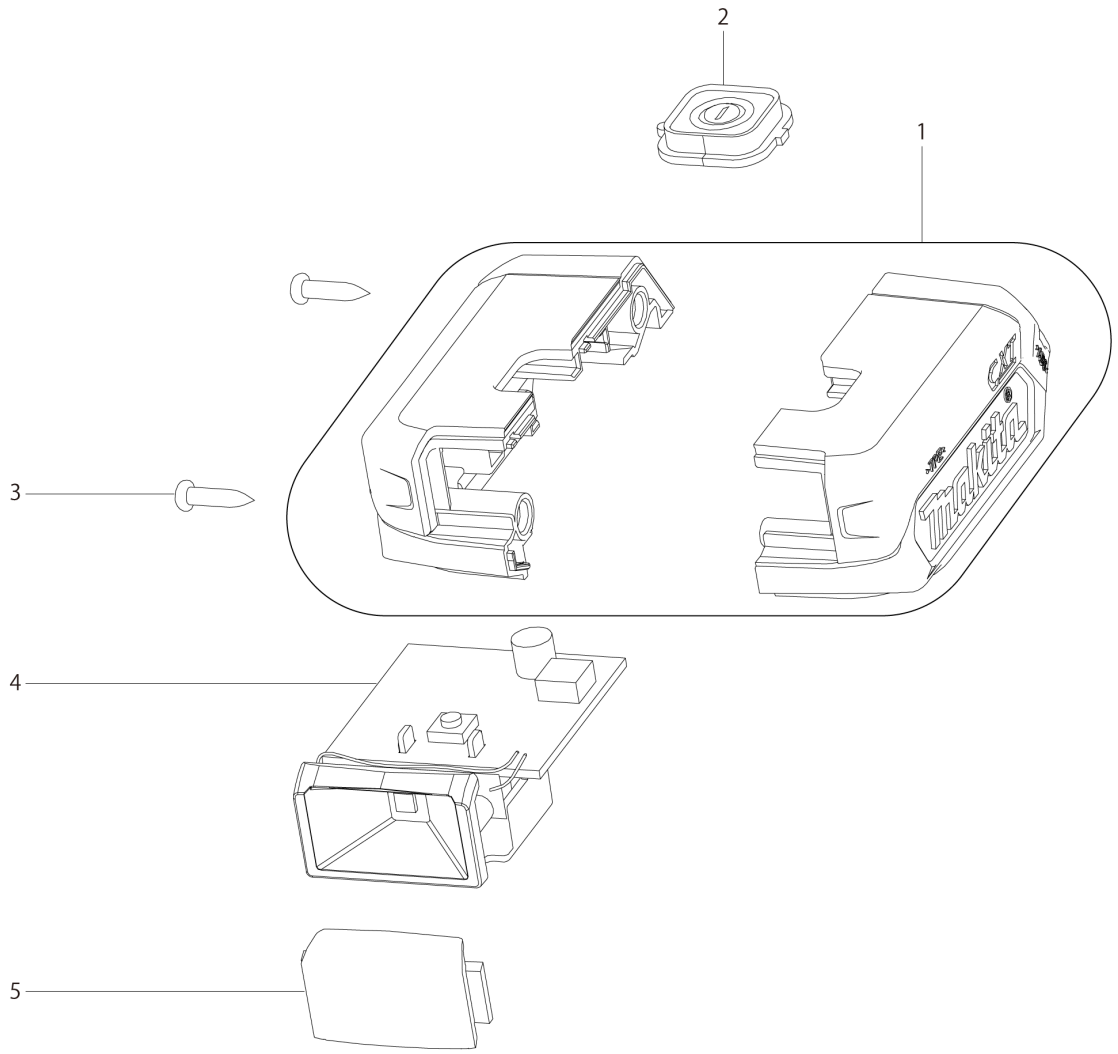

DE	GERMANY

ML103 / CORDLESS LED FLASHLIGHT

Item	Sub	Parts No.	Parts Description	Qty	I/C	E/C No.	Close No.	Remark
001		GM00001496	HOUSING L/R ASS'Y ROS81030003	1				
002		GM00001495	SWITCH HOLDER ASSY ROS81030002	1				
003		GM00001024	SCREW 3X12 B0130120202	2				
004		GM00001493	MAIN CIRCUIT ASSY ROS81030001	1				
005		GM00001492	LENZ ROS81030000	1				

Interchange
O : Yes
X : No
< : the new part can be substituted for the current.
> : the current part can be substituted for the new.
S : Interchangeable as a set.